# CHF 423 U

## ELECTRIC CONVECTION OVEN WITH HUMIDIFICATION

The contained sizes of this oven make it ideal for locations where space is a precious asset and electric power is a resource not to abuse. You will get delicious and tasty snacks with the practical indirect humidification system. The oven has a wrapper certificated of IPX3 for water protection degree. Easy to clean thanks to the folding door with inspectionable glass.

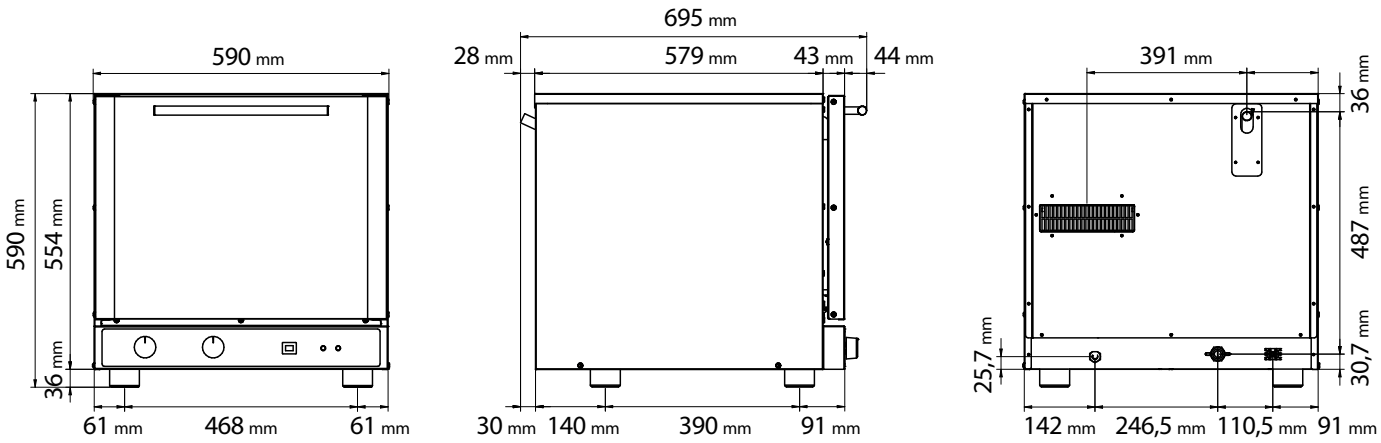


## DIMENSIONAL FEATURES

| | | | |
|---|---|---|---|
| **Oven dimensions (WxDxH mm)** | 590 | 695 | 590 |
| **Oven weight (kg)** | 34,2 | | |
| **Distance between rack rails (mm)** | 74 | | |

## ELECTRICAL FEATURES

| | |
|---|---|
| **Power supply (kW)** | 2,8 |
| **Frequency (Hz)** | 50/60 |
| **Voltage (Volt)** | AC 220/230 |
| **N° of motors** | 1 Unidirectional |
| **Boiler** | / |
| **Protection against water** | IPX3 |

## EQUIPMENT

| | | | |
|---|---|---|---|
| Cardboard box dimensions (WxDxH mm) | 650 | 760 | 600 |
| Lateral supports | 1 right + 1 left | | |
| Aluminum trays (429x345 mm) | 4 pcs | | |
| Cable | Single-phase [3G 1,5] - l=1600 mm | | |

## PLUS

| |
|---|
| **Stainless steel cooking chamber** |
| **Door of the oven with inspectionable glass** |
| **Embedded gasket** |
| **Stackable** |
| **Forced cooling system of inner parts** |
| **IPX 3** |
| **New design of cooking chamber** |
| **CB certification** |
| **New design of handle** |

## FUNCTIONAL FEATURES

| | |
|---|---|
| **Power** | Electricity |
| **Capacity** | N° 4 Trays (429x345 mm) |
| **Type of cooking** | Ventilated |
| **Humidification** | Indirect with button |
| **Cooking chamber** | AISI 430 Stainless steel |
| **Temperature** | 50 ÷ 300°C |
| **Temperature control** | Thermostat |
| **Control panel** | Electromechanic – Lower side |
| **N° of programs** | / |
| **Programmable cooking steps** | / |
| **Pre-heating temperature** | / |
| **Pre-heating function** | / |
| **Door** | Tilt door<br>Ventilated<br>Inspectionable glass |
| **Modularity** | Available |
| **Feet** | Not Adjustable |